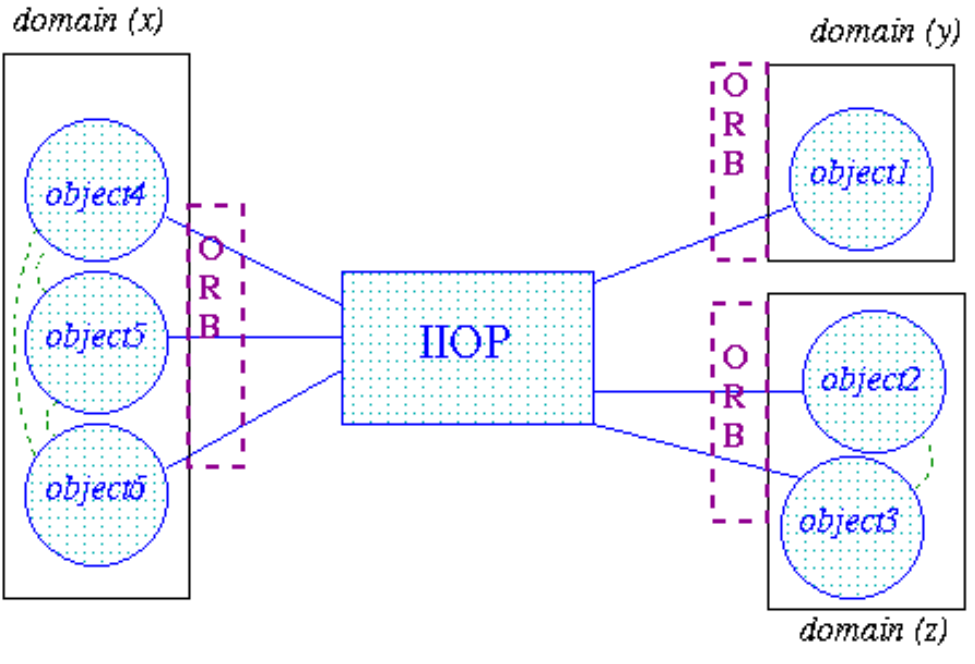
domain (x)
domain (y)
domain (z)
object4
object5
object6
object1
object2
object3
ORB
ORB
ORB
IIOP